2910 QUANT AVE N
STILLWATER, MN 55082
651-439-2604
800-7379503
Fax: 651-439-4247
www.sharpauto.com

Shop Name:	Yard Name: **Sharp Auto Parts**
Contact Name:	Salesperson Name:
Contact Email:	Salesperson Email:
Shop's PO#	Order#:
Yr/Model:	Salesperson Direct #:
Phone:	Fax Back#:

Body cuts including front end assemblies, quarter panels, roofs, center posts, rockers, rear clips, and box sides must have a cut sheet completed and signed by the customer before cutting begins. Body cuts are non-returnable and non-refundable. COD customers must pay in advance before cutting begins. Extra charges will apply for cuts that extend beyond the industry standard cut sections.

Cut Sheet: 4 Door Full-Frame

PASSENGER SIDE

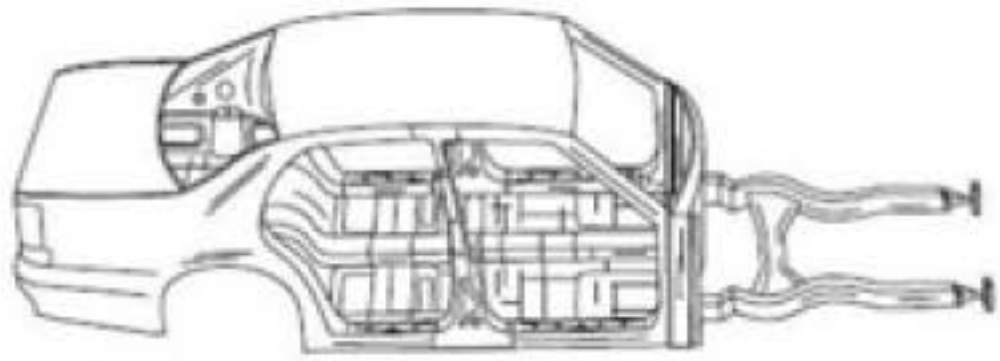

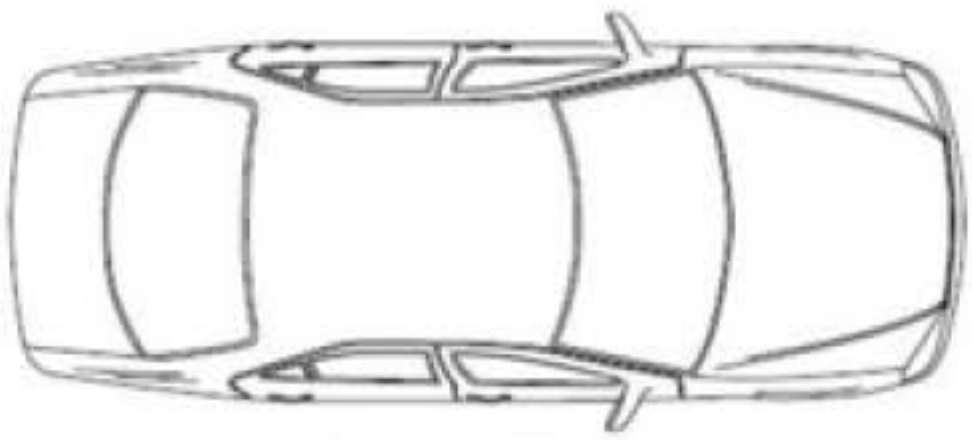

TOP VIEW

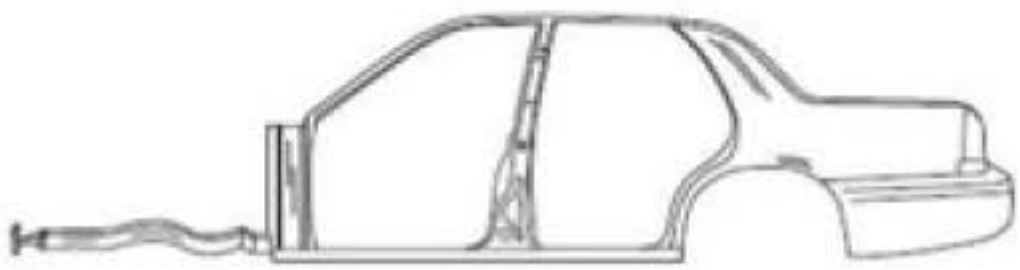

DRIVER SIDE

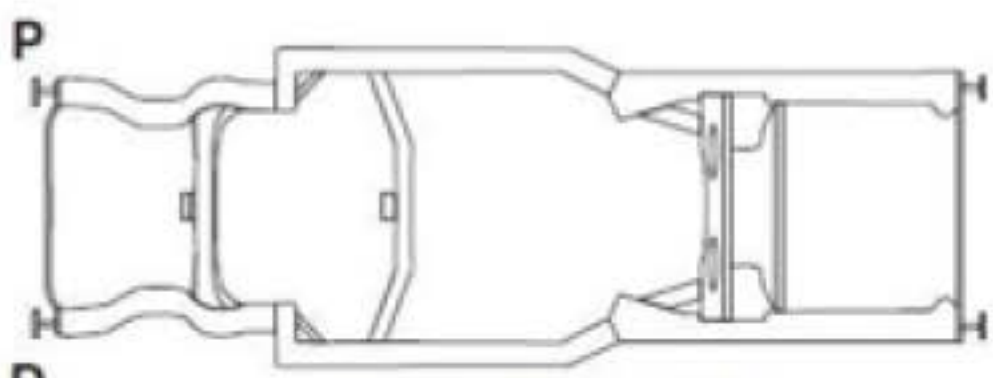

UNDERBODY VIEW

Please use the area below for a detail of cut instructions:

Notes: